LC-R9i
EXERCISE BIKE

R9-0100-01

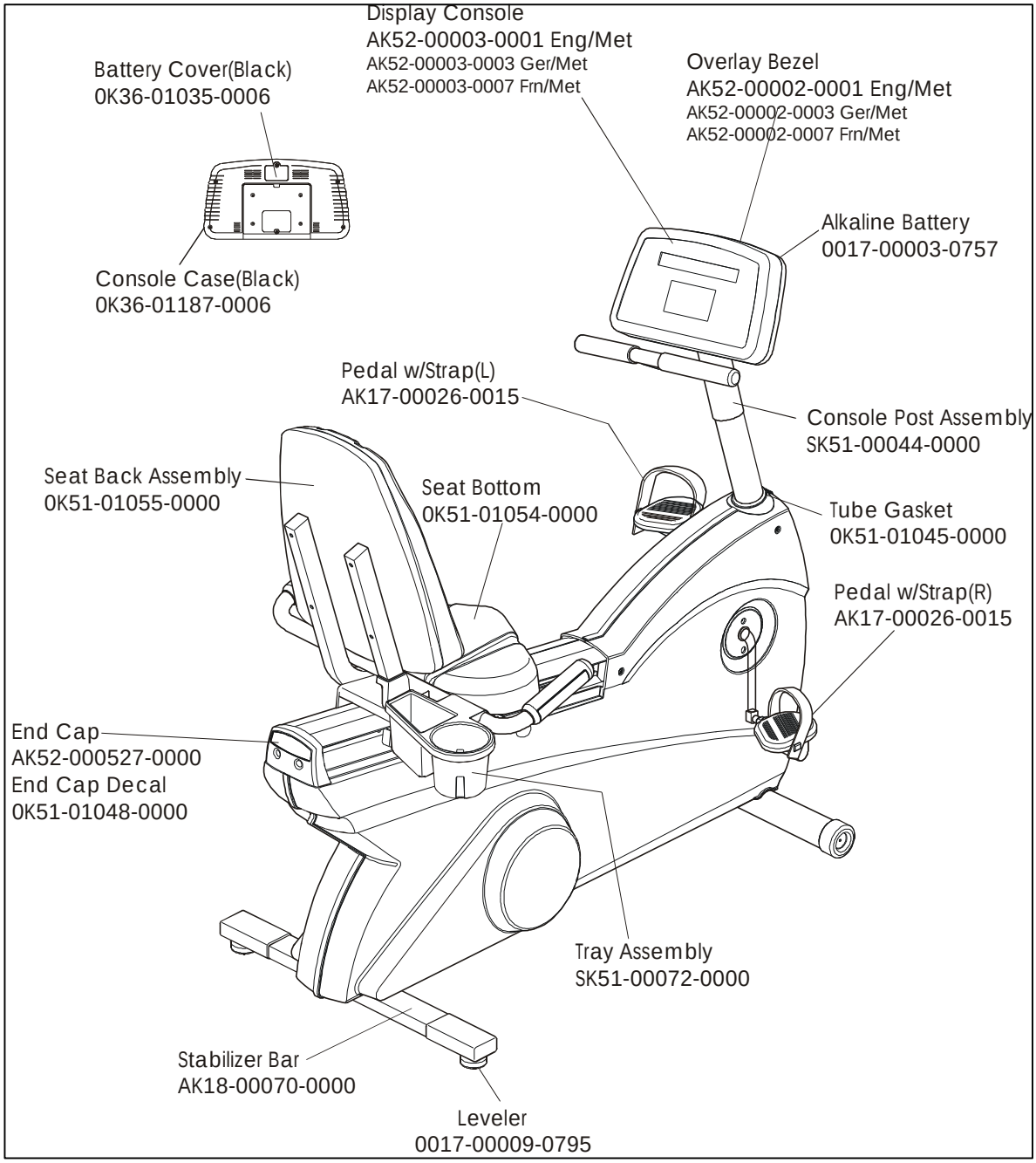

Revision Date: 4/26/00

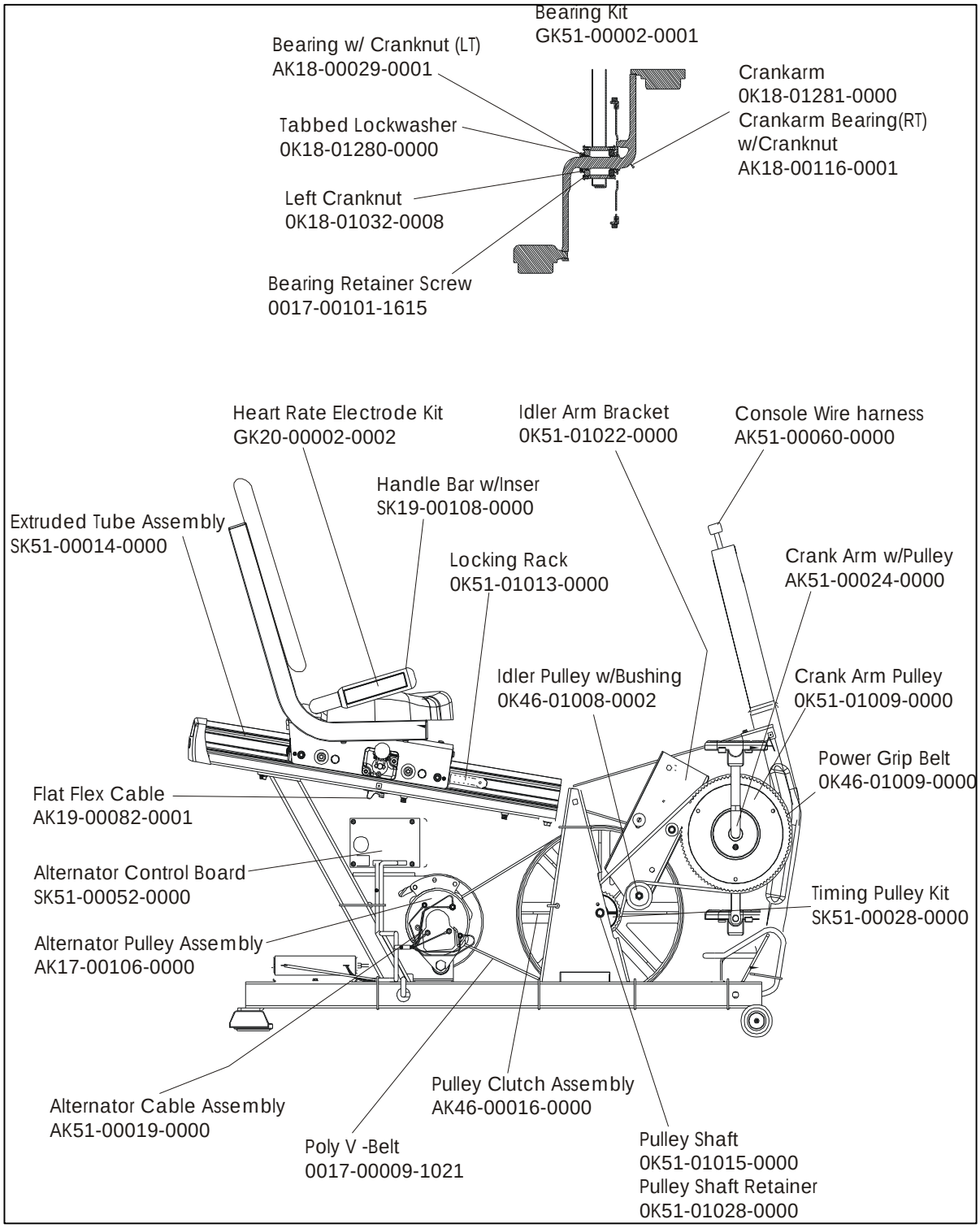
Bearing Kit
GK51-00002-0001
Bearing w/ Cranknut (LT)
AK18-00029-0001
Crankarm
0K18-01281-0000
Crankarm Bearing(RT)
w/Cranknut
AK18-00116-0001
Tabbed Lockwasher
0K18-01280-0000
Left Cranknut
0K18-01032-0008
Bearing Retainer Screw
0017-00101-1615
Heart Rate Electrode Kit
GK20-00002-0002
Idler Arm Bracket
0K51-01022-0000
Console Wire harness
AK51-00060-0000
Handle Bar w/Inser
SK19-00108-0000
Extruded Tube Assembly
SK51-00014-0000
Locking Rack
0K51-01013-0000
Crank Arm w/Pulley
AK51-00024-0000
Idler Pulley w/Bushing
0K46-01008-0002
Crank Arm Pulley
0K51-01009-0000
Power Grip Belt
0K46-01009-0000
Flat Flex Cable
AK19-00082-0001
Alternator Control Board
SK51-00052-0000
Timing Pulley Kit
SK51-00028-0000
Alternator Pulley Assembly
AK17-00106-0000
Alternator Cable Assembly
AK51-00019-0000
Pulley Clutch Assembly
AK46-00016-0000
Poly V -Belt
0017-00009-1021
Pulley Shaft
0K51-01015-0000
Pulley Shaft Retainer
0K51-01028-0000

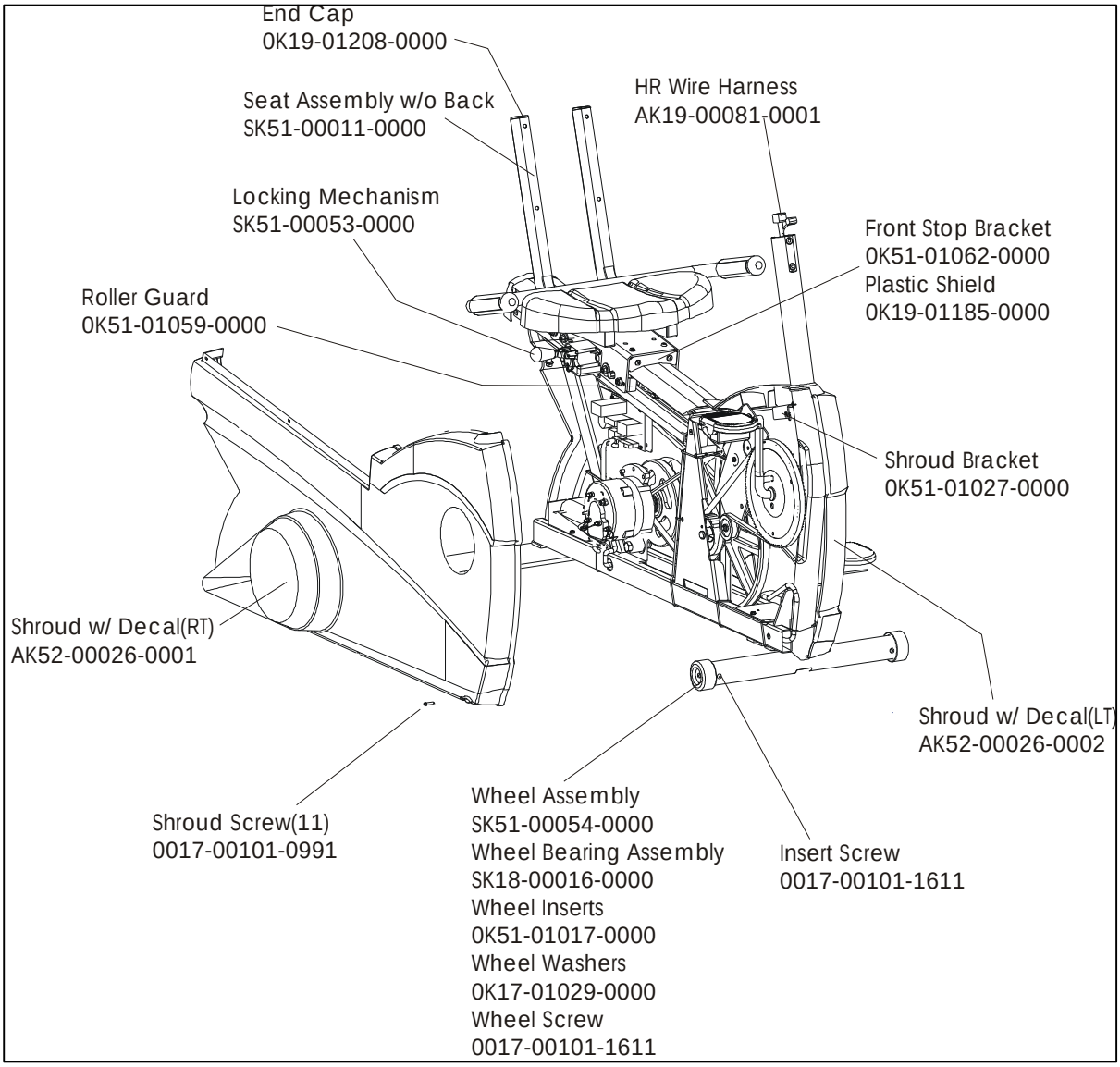
End Cap
0K19-01208-0000
Seat Assembly w/o Back
SK51-00011-0000
HR Wire Harness
AK19-00081-0001
Locking Mechanism
SK51-00053-0000
Front Stop Bracket
0K51-01062-0000
Plastic Shield
0K19-01185-0000
Roller Guard
0K51-01059-0000
Shroud Bracket
0K51-01027-0000
Shroud w/ Decal(RT)
AK52-00026-0001
Shroud w/ Decal(LT)
AK52-00026-0002
Shroud Screw(11)
0017-00101-0991
Wheel Assembly
SK51-00054-0000
Wheel Bearing Assembly
SK18-00016-0000
Wheel Inserts
0K51-01017-0000
Wheel Washers
0K17-01029-0000
Wheel Screw
0017-00101-1611
Insert Screw
0017-00101-1611